MICRO SWITCH
FREEPORT ILLINOIS, U.S.A
A DIVISION OF HONEYWELL
FED. MFG. CODE 91929

SWITCH - BASIC

CATALOG LISTING
YZ-2RW8435114-D5-S

YZ-2RW8435114-D5-S
PAGE 1 OF 1
RELEASE NO. PR-8793
REPLACES X70709-YZ
DRAWING NUMBER
ISSUE 6

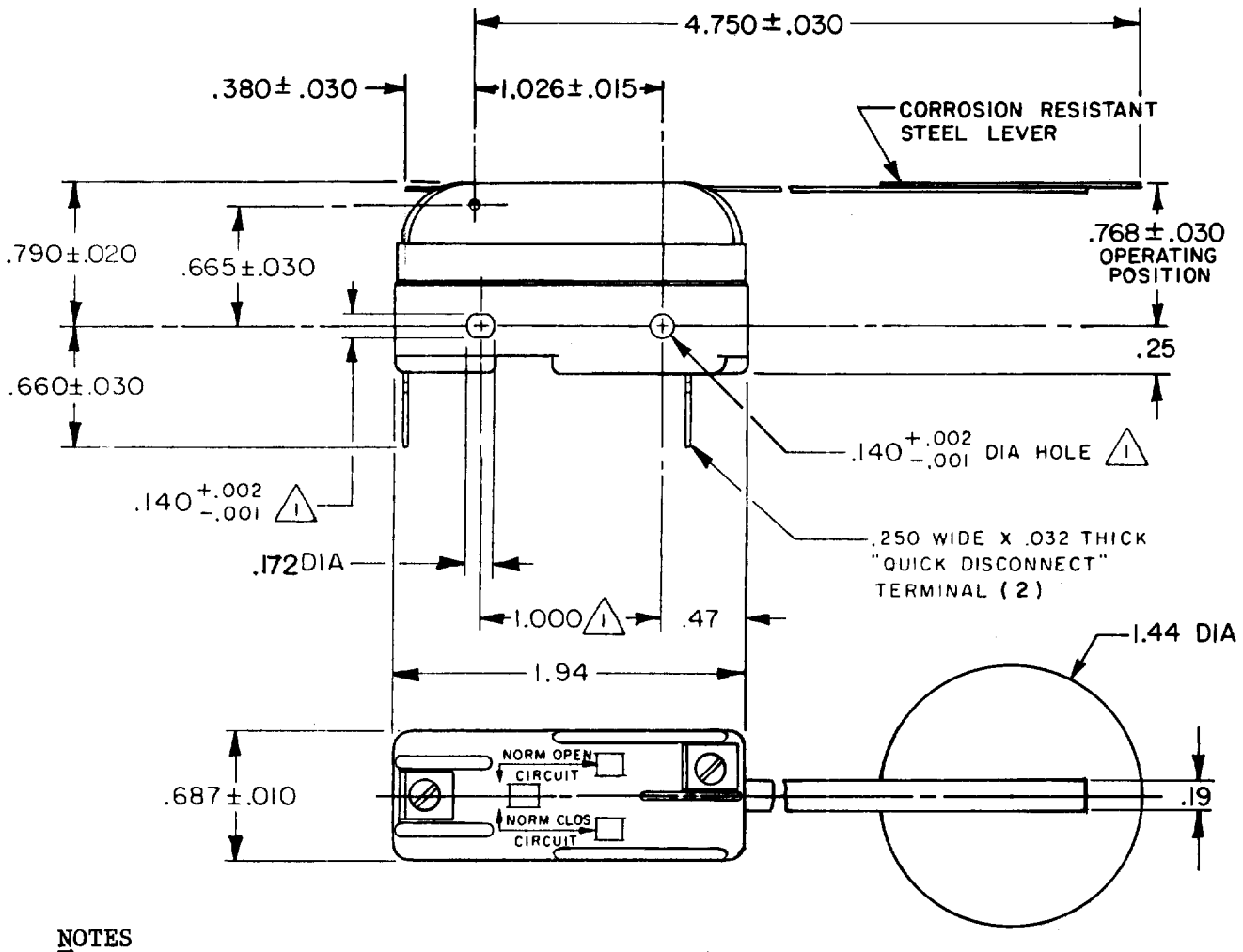

NOTES
1. MOUNTING HOLES WILL ACCEPT PINS OR SCREWS OF .139 MAX DIA ON 1.000±.002 CENTERS
2 - PLASTIC PARTS ARE MADE OF MINERAL FILLED PHENOLICS
3 - LEVER IS NOT NECESSARILY SELF RETURNING WHEN SWITCH IS IN THE UPRIGHT POSITION

REVISIONS

A	CO 52433	WJM 14 DEC 82
B	CO 53238	WJM 21 JUN 83
C	CO 77590	SAD 10 JUN 94
D	C093346	DLT 17 AUG 98
E	CO-94212-K	DLT 5 NOV 99

THIS DRAWING COVERS A PROPRIETARY ITEM AND IS THE PROPERTY OF MICRO SWITCH, A DIVISION OF HONEYWELL. THIS DRAWING IS NOT TO BE COPIED OR USED WITHOUT THE APPROVAL OF MICRO SWITCH.

THIRD ANGLE PROJECTION

CHARACTERISTICS

OPERATING FORCE --- 5 GRAM MAX (MEASURED WITH SWITCH ON SIDE)

ELECTRICAL DATA

CONTACT ARRANGEMENT
S P N O

UL LISTED – FILE E12252
CODE L9 10A–125, 250 OR 480 VAC
1/2A - 125 VDC; 1/4A - 250 VDC

L288

SCALE FULL

DO NOT SCALE PRINT

TOLERANCES
APPLY TO DESIGN UNITS. CONVERSIONS ARE ONLY FOR REFERENCE. UNLESS NOTED, TOLERANCES ARE ±

	DIM. mm	TOL. mm/in	DIM in	TOL mm/in
NO PLACES	X	1/.04		
ONE PLACE	X.X	0.4/.016	X.X	0.8/.03
TWO PLACES	X.XX	0.15/.006	X.XX	0.38/.015
THREE PLACES			X.XXX	0.13/.005
ANGLES				

SI METRIC ☐ DESIGN UNITS ☐ US CUSTOMARY ■

WEIGHT .060 LB

FORMTEK
FO-52848-A
DRAWN WJM 15 MAY 80
CHECK DJW 16 MAY 80
CHECK
CHECK