THIS COPY IS PROVIDED ON A RESTRICTED BASIS AND IS NOT TO BE USED IN ANY WAY DETRIMENTAL TO THE INTERESTS OF PANDUIT CORP.

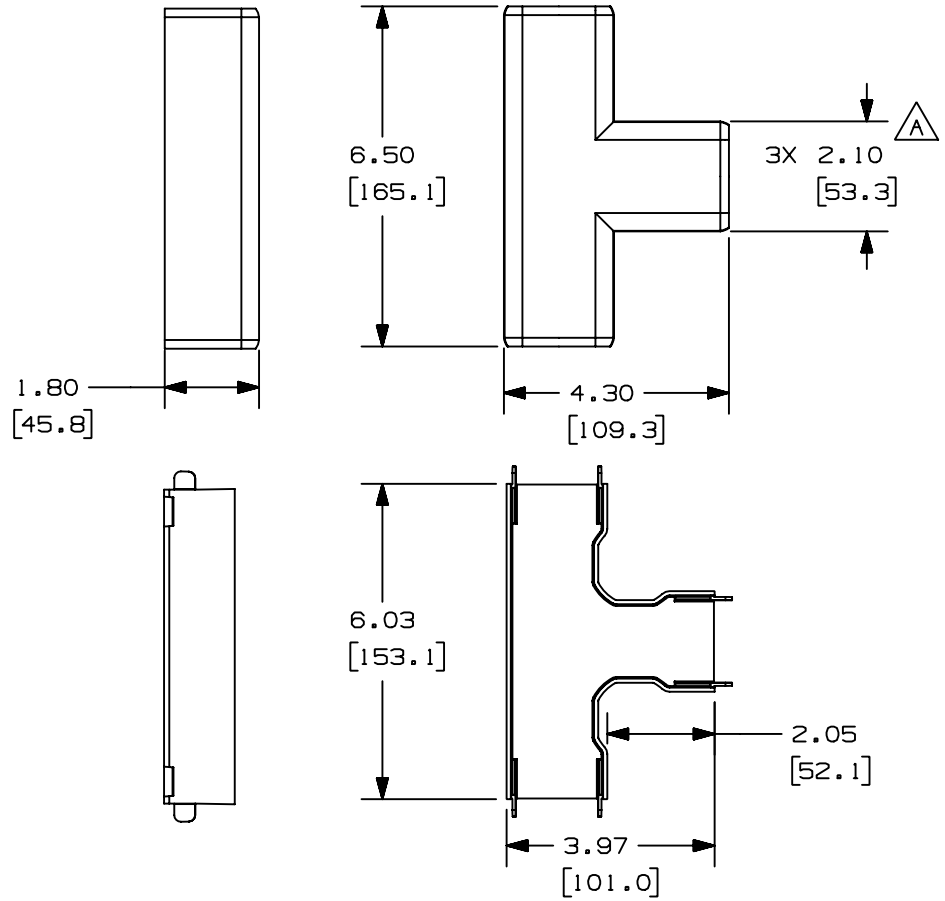

PANDUIT PART NO.	WEIGHT
OFR20T	.29 lbs / EACH (131.5 g / EACH)

NOTES:

1. SEE CURRENT CATALOG FOR ADDITIONAL PART NUMBER SUFFIXES TO INDICATE COLOR AND/OR PACKAGE QUANTITY.
2. DIMENSIONS IN PARENTHESES ARE IN METRIC.
3. FITTING PROVIDES 1" MIN. BEND RADIUS.

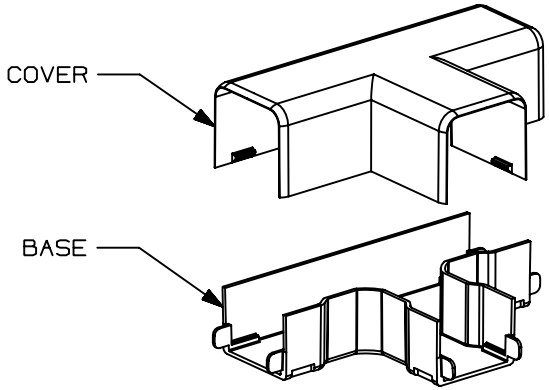

REV	DATE	BY	CHK	DESCRIPTION	ECN	CHK	CUST	SUP
2	9-22-03	JHNU	RPA	A. REVISED DIMENSION: 3X WAS 2X.	38509-08	RGRO	RGRO	
1	04-25-03	JBN	RPA	RELEASED TO PRODUCTION	38509-08	RGRO	RGRO	
R	03-13-03	JBN	RPA	DRAWING RELEASED				

CAD FILENAME/LAYERS: D38509BH_DC_OFR20T_00C.PRT

PANDUIT CORP. TINLEY PARK, ILLINOIS

OFFICE FURNITURE
TEE FITTING (OFR20T)
CUSTOMER DRAWING

UNLESS OTHERWISE SPECIFIED, DIMENSIONAL TOLERANCES ARE:
(.X) ± (.XXX) ±
(.XX) ± .03 [.8] ANGLES ±

UNLESS OTHERWISE SPECIFIED, ALL DIMENSIONS ARE GIVEN IN INCHES, THIRD ANGLE PROJECTION.

DRAWN BY: JBN
DATE: 03-13-03
CHK'D: RPA
MAT'L: PVC
SCALE: NONE
DRAWING NO.: 38509-08
DWG SIZE: A