THIS DRAWING IS UNPUBLISHED. RELEASED FOR PUBLICATION -,- .
© COPYRIGHT - By - ALL RIGHTS RESERVED.

LOC	DIST
GP	00

REVISIONS

P	LTR	DESCRIPTION	DATE	DWN	APVD
	N	REVISED PER ECO-11-003735	17MAR2011	CJV	SLB

1. THE NOTED DIMENSIONS APPLY AT THE INTERSECTION OF THE POST AND HOUSING
2. POSTS: GOLD FLASH OVER PALLADIUM-NICKEL PLATE, .000015 MIN TOTAL ON THE MATING SURFACES, .000100 MIN TIN-LEAD PLATE ON THE SOLDER-TAILS, .000050 MIN NICKEL UNDERPLATE ON THE ENTIRE POST.
   -OR-
   .000015 MIN GOLD PLATE ON THE MATING SURFACES, .000100 MIN TIN-LEAD PLATE ON THE SOLDER-TAILS, .000050 MIN NICKEL UNDERPLATE ON THE ENTIRE POST.
3. DOUBLE BAR POLARIZATION
4. CENTER POLARIZATION SLOT
5. FOR 10 POSN ASSEMBLY, SLOT OMITTED WHERE INDICATED
6. NUMBER 1 POSITION INDICATOR.
7. DATUMS -Y- AND -Z- APPLY AT THE BASE OF THE SHROUD WALL.
8. OPTIONAL AMP IDENTIFICATION NUMBER (DATE CODE). LOCATION APPROXIMATELY WHERE SHOWN.

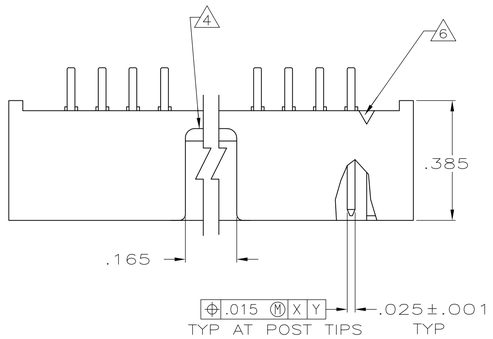

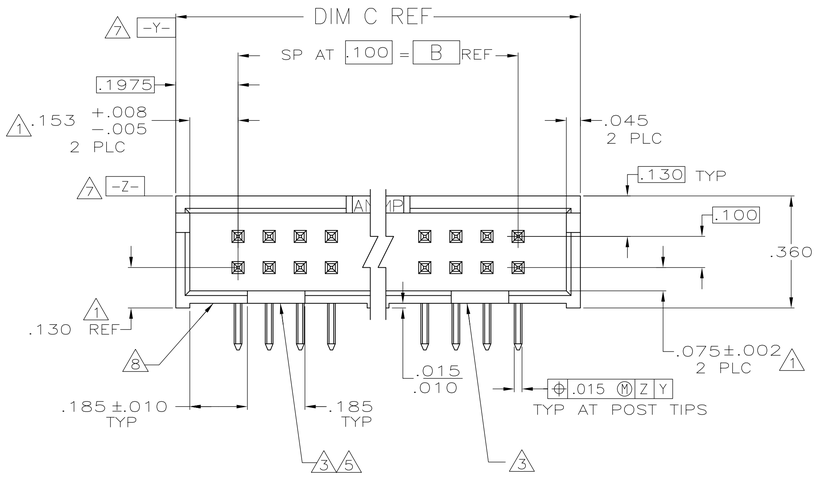

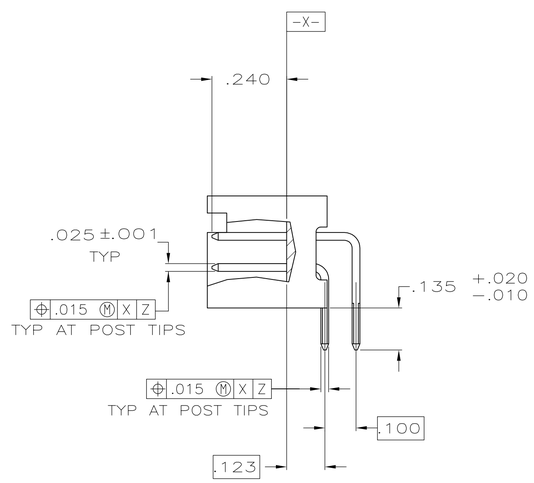

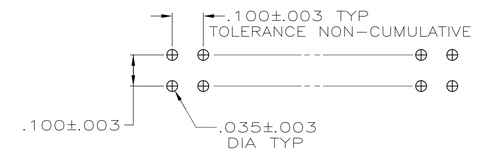

RECOMMENDED HOLE LAYOUT
FOR MANUAL INSERTION

OBSOLETE	3.300	2.900	29	60	1-103310-2
OBSOLETE	3.100	2.700	27	56	1-103310-1
	2.800	2.400	24	50	1-103310-0
OBSOLETE	2.500	2.100	21	44	103310-9
	2.300	1.900	19	40	103310-8
	2.000	1.600	16	34	103310-7
	1.600	1.200	12	26	103310-6
	1.300	.900	9	20	103310-5
OBSOLETE	1.200	.800	8	18	103310-4
	1.100	.700	7	16	103310-3
	1.000	.600	6	14	103310-2
	.800	.400	4	10	103310-1
	C	B	A	NO OF POSN	ASSEMBLY PART NUMBER

THIS DRAWING IS A CONTROLLED DOCUMENT.

DIMENSIONS: INCHES

TOLERANCES UNLESS OTHERWISE SPECIFIED:
0 PLC ± -
1 PLC ± -
2 PLC ± -
3 PLC ± .005
4 PLC ± -
ANGLES ± -

MATERIAL
HOUSING: GLASS FILLED NYLON OR PBT, BLACK, UL 94V-0 RATED.
POSTS: BRASS

FINISH 2

DWN H MOLL 8-27-87
CHK L A MAYER 9-4-87
APVD R. FLICKER 9-4-87
PRODUCT SPEC 108-40018
APPLICATION SPEC -
WEIGHT -

TE Connectivity

NAME HEADER ASSY, LOW PROFILE, AMP-LATCH -

SIZE	CAGE CODE	DRAWING NO	RESTRICTED TO
A1	00779	C-103310	-

CUSTOMER DRAWING SCALE 4:1 SHEET 1 OF 1 REV N

4805 (3/11)